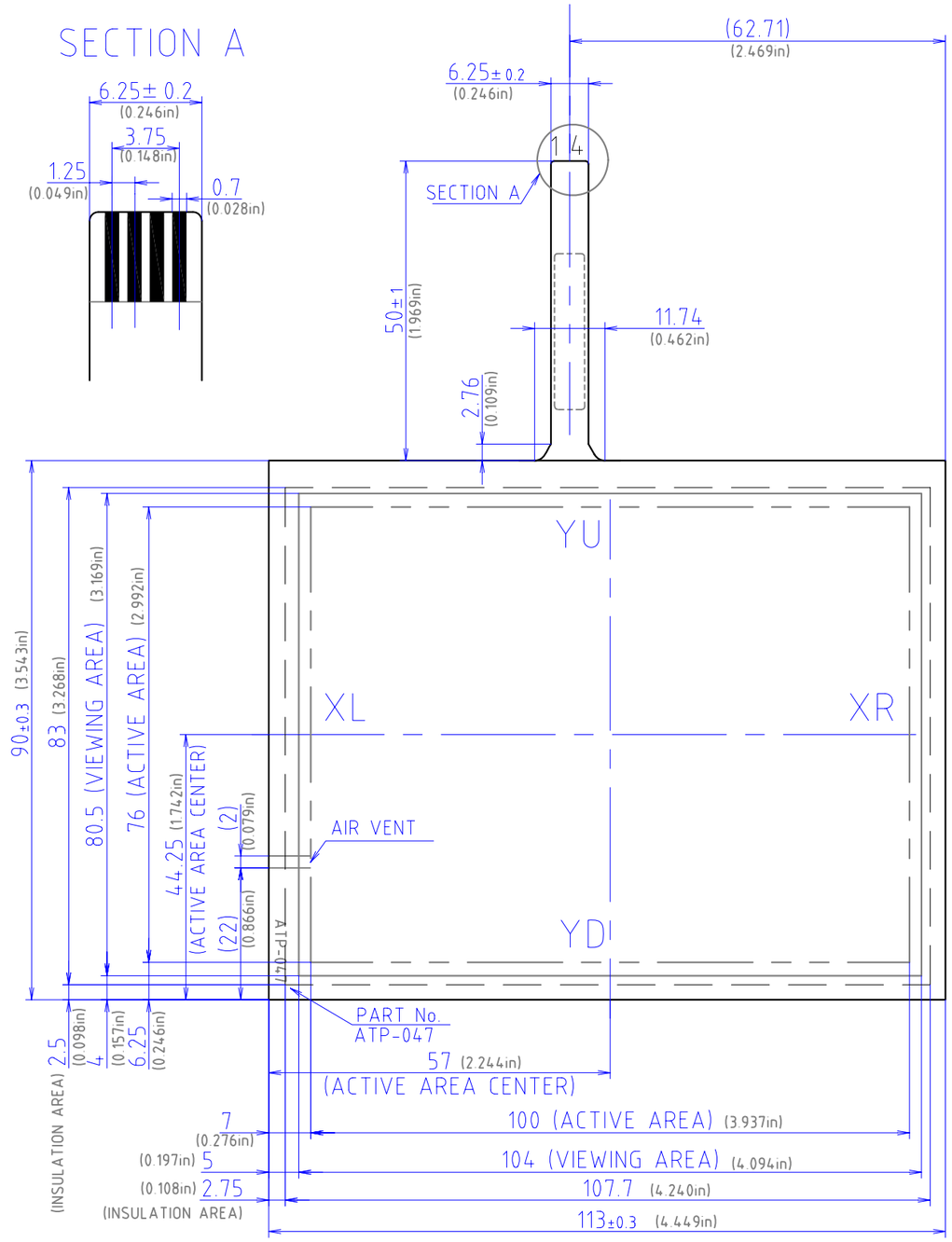

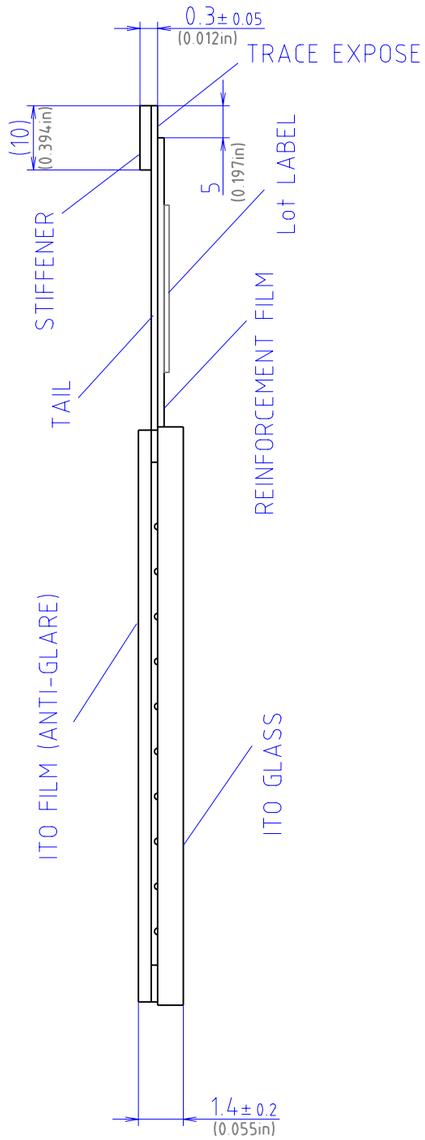

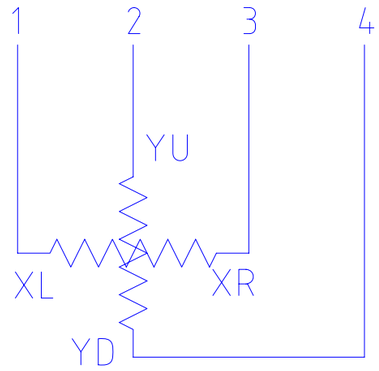

PIN ASSINGNMENT

TOLERANCE=± 0.5mm(.02in)
EXCEPT WHERE INDICATED

UNIT=mm(in)

PART	DATE
ATP-047	JUL.09, 2007
TYPE	
STANDARD TOUCHSCREEN DIMENSIONAL DRAWING	DMC Co., Ltd.